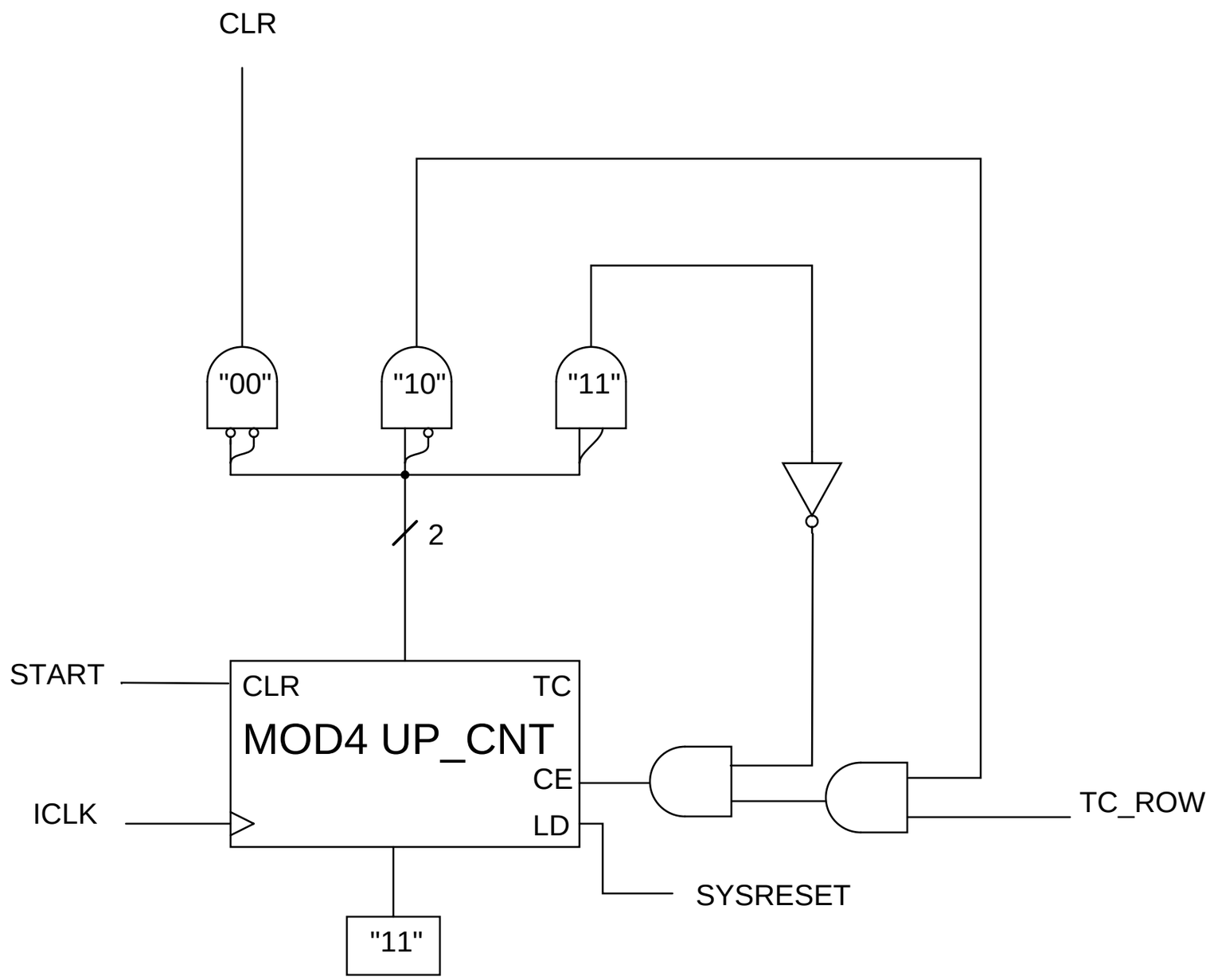
CLR
"00"
"10"
"11"
2
START
CLR
TC
MOD4 UP_CNT
CE
ICLK
LD
TC_ROW
SYSRESET
"11"

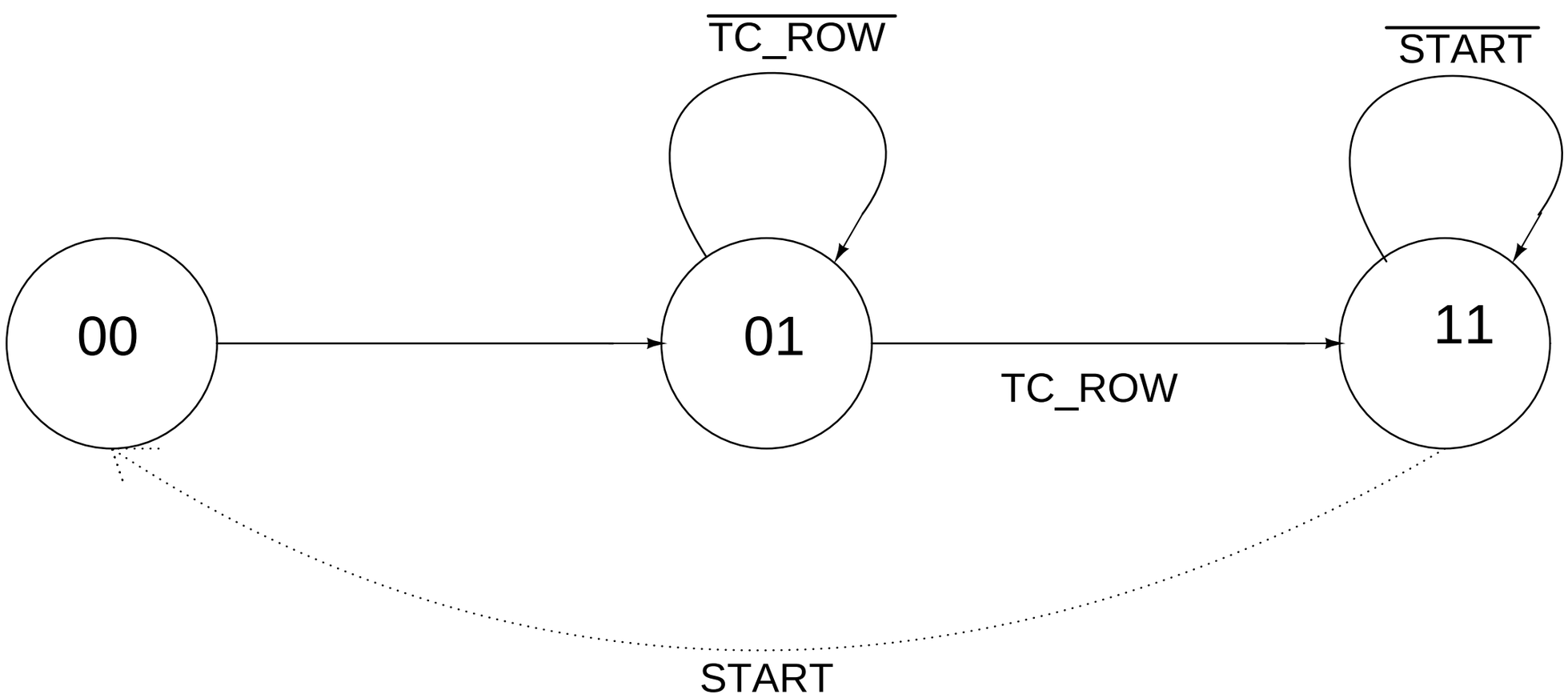
$\overline{\text{TC_ROW}}$
$\overline{\text{START}}$
00
01
11
TC_ROW
START