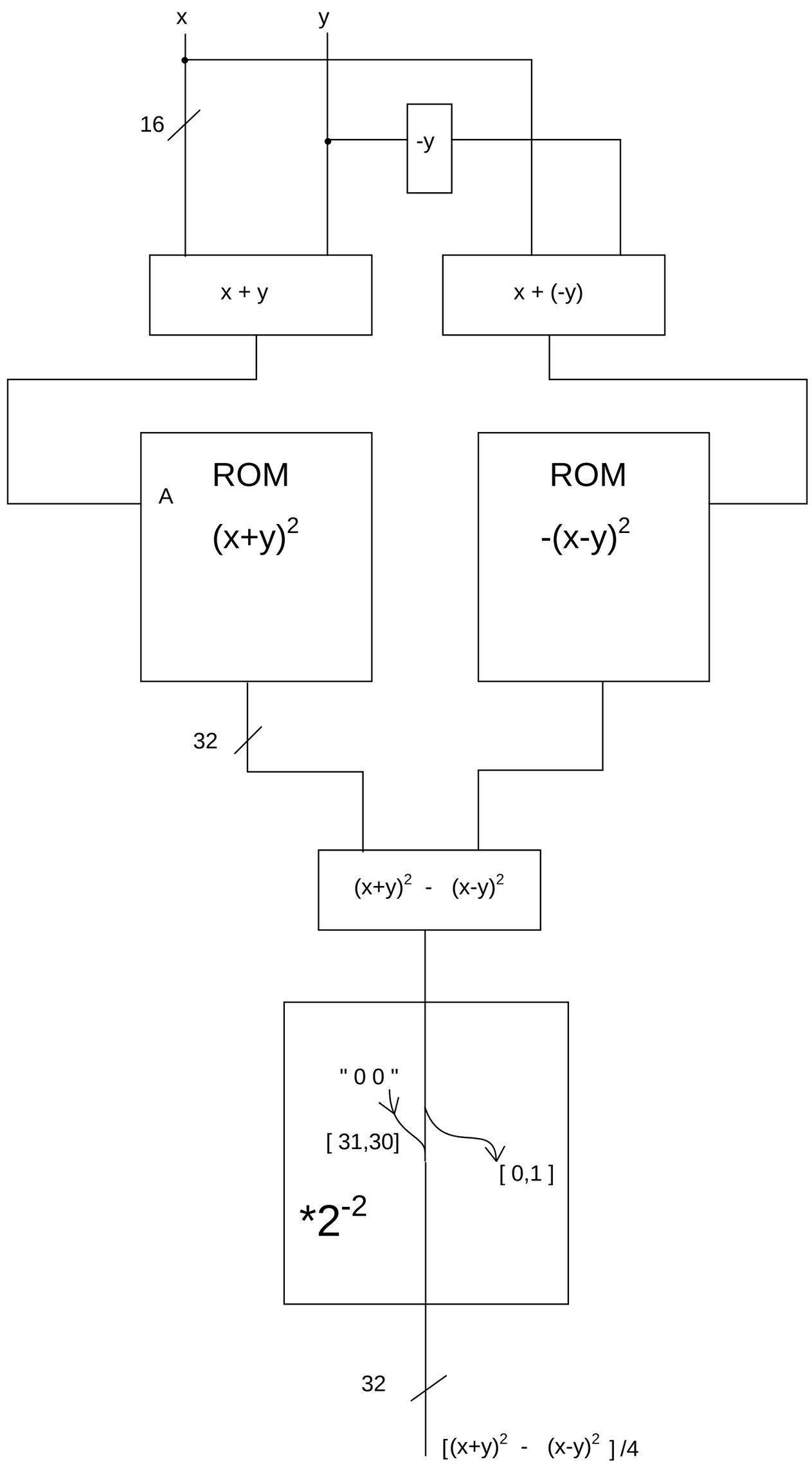
x
y
16
-y
x + y
x + (-y)
ROM
A
(x+y)2
ROM
-(x-y)2
32
(x+y)2 - (x-y)2
" 0 0 "
[31,30]
[0,1]
*2-2
32
[(x+y)2 - (x-y)2] /4